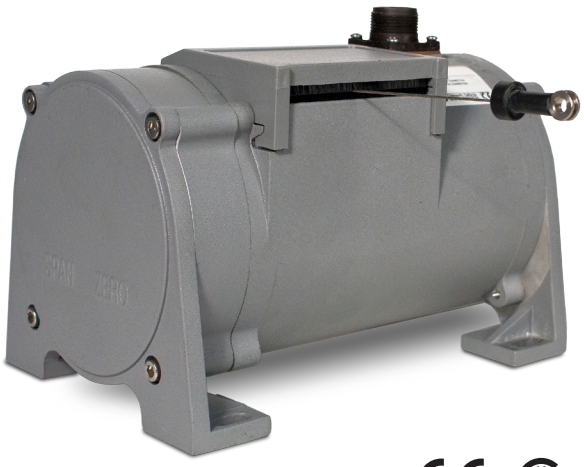

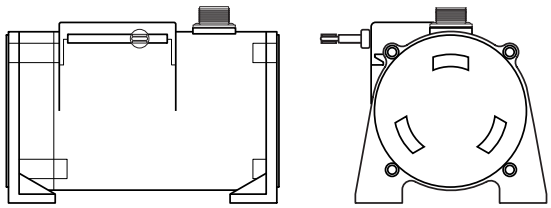

PT9420

Cable Actuated Sensor
Industrial • 4..20 mA • 0..20mA

Absolute Linear Position to 550 inches (14 meters)

Aluminum or Stainless Steel Enclosure Options

VLS Option to Prevent Free-Release Damage

IP68 / NEMA 6 • Hazardous Area Certification

The PT9420 is a great value for demanding long-range applications requiring a 4 - 20 mA linear position feedback signal. Sealed to meet NEMA 4 standards, this Cable-Extension Transducer will perform even under the harshest of environmental conditions.

As a member of our innovative family of NEMA-4 rated cable-extension transducers, the PT9420 offers numerous benefits. It installs in minutes, functions properly without perfectly parallel alignment, and when its cable is retracted, it measures only 6".

Output Signal

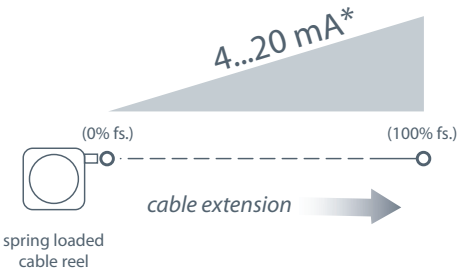

**Optional 3-wire, 0...20mA output signal available.*

GENERAL

Full Stroke Range Options	0-75 to 0-550 inches (on this data sheet)
Output Signal Options	4...20 mA (2-wire) and 0...20 mA (3-wire)
Accuracy	± 0.12% full stroke
Repeatability	± 0.05% full stroke
Resolution	essentially infinite
Measuring Cable Options	stainless steel or thermoplastic
Enclosure Material	powder-painted aluminum or 303 stainless steel
Sensor	plastic-hybrid precision potentiometer
Potentiometer Cycle Life	≥ 250,000
Max. Retraction Acceleration	see ordering information
Max. Velocity	see ordering information
Weight, Aluminum Enclosure	8 lbs. max.
Weight, Stainless Steel Enclosure	16 lbs, max.

ELECTRICAL

Input Voltage	see ordering information
Input Current	20 mA max.
Maximum Loop Resistance (Load)	(loop supply voltage – 8)/0.020
Circuit Protection	38 mA max.
Impedance	100M ohms @ 100 VDC, min.
Output Signal, Zero Adjust	up to 50% of full stroke range
Output Signal, Span Adjust	to 50% of factory set span

ENVIRONMENTAL

Enclosure	NEMA 4/4X/6, IP 67/68
Hazardous Area Certification	see ordering information
Operating Temperature	-40° to 200°F (-40° to 90°C)
Vibration	up to 10 g to 2000 Hz maximum
Thermal Effects, Zero	0.01% f.s./°F, max.
Thermal Effects, Span	0.01%/°F, max.

EMC COMPLIANCE PER DIRECTIVE 89/336/EEC

Emission / Immunity	EN50081-2 / EN50082-2

Fig. 1 - Outline Drawing (18 oz. cable tension option only):

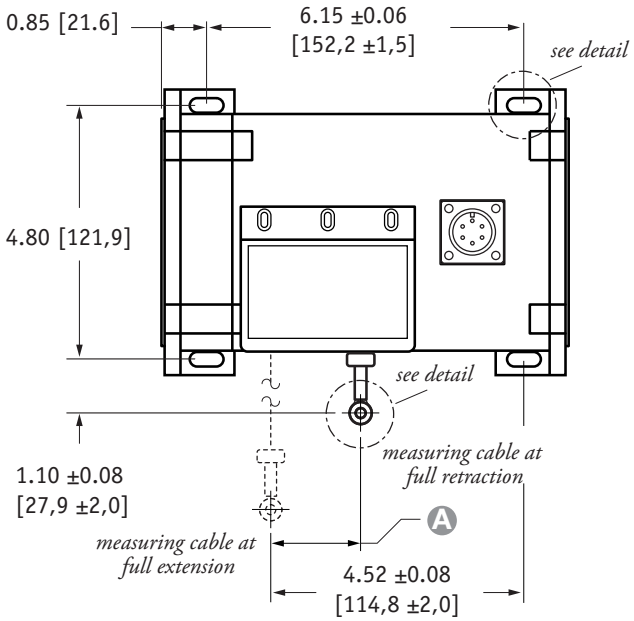

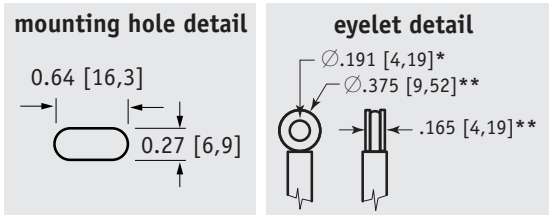

A DIMENSION (INCHES)

	MEASURING CABLE			
RANGE	**∅.031 in.**	**∅.034 in.**	**∅.047 in.**	**∅.062 in.**
75	n/a	0.22	0.29	0.37
100	n/a	0.29	0.39	0.49
150	n/a	0.44	0.59	0.73
200	n/a	0.58	0.79	0.98
250	n/a	0.73	0.98	1.22
300	n/a	0.88	1.18	1.47
350	n/a	1.02	1.38	1.71
400	n/a	1.17	1.57	1.96
450	n/a	1.31	1.77	n/a
500	n/a	1.46	1.97	n/a
550	1.61	1.61	n/a	n/a

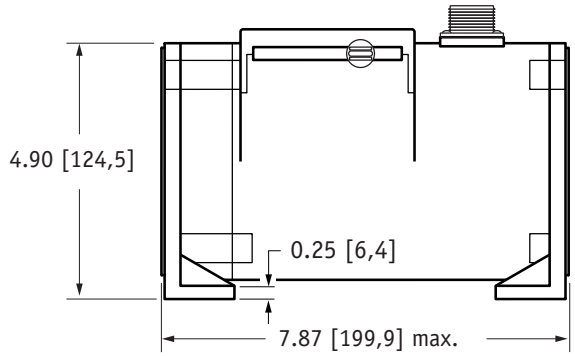

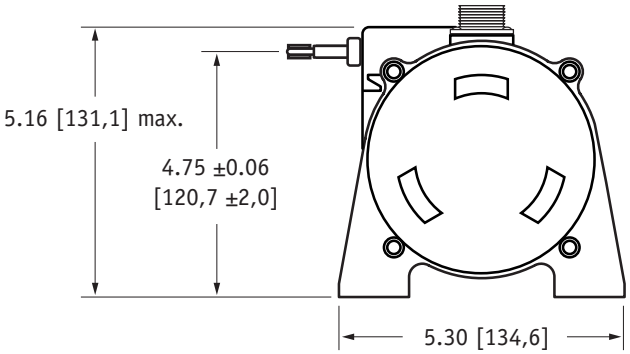

DIMENSIONS ARE IN INCHES [MM]
tolerances are 0.03 IN. [0.5 MM] unless otherwise noted.

* tolerance = +.005 –.001 [+.13 –.03]
** tolerance = +.005 –.005 [+.13 –.13]

Ordering Information:

Model Number:

PT9420- _____ Ⓡ **-** ___ Ⓐ Ⓑ Ⓒ **-** 1 Ⓓ Ⓔ Ⓕ 0 Ⓖ
order code:

Sample Model Number:
PT9420 - 0500 - 111 - 1110

Ⓡ	range:	500 inches
Ⓐ	enclosure/cable tension:	aluminum/18 oz.
Ⓑ	measuring cable:	.034 nylon-coated stainless
Ⓒ	cable exit:	front
Ⓔ	output signal:	4...20 mA, 2-wire
Ⓕ	electrical connection:	6-pin plastic connector

Full Stroke Range:

Ⓡ *order code:*	0075	0100	0150	0200	0250	0300	0350	0400	0450*	0500*	0550*
full stroke range, min:	75 in.	100 in.	150 in.	200 in.	250 in.	300 in.	350 in.	400 in.	450 in.	500 in.	550 in.

** – 36 oz. cable tension strongly recommended*

Ordering Information (cont.):

Enclosure Material and Measuring Cable Tension:

Ⓐ order code:	1	3	2	4
tension (±30%):	18 oz.		36 oz.	
enclosure material:	*powder-painted aluminum*	*303 stainless steel*	*powder-painted aluminum*	*303 stainless steel*
max. acceleration:	1 g	1 g	5 g	5 g
max. velocity:	60 inches/sec	60 inches/sec	200 inches/sec	200 inches/sec
	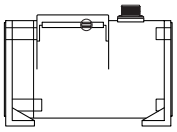 standard housing *see fig 1.*		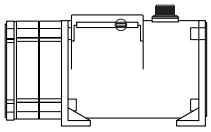 dual-spring housing *see fig 2.*	

Measuring Cable:

Ⓑ order code:	1	2	3	4
cable construction:	Ø.034-inch nylon-coated stainless steel rope	Ø.047-inch bare stainless steel rope	Ø.058-inch PVC jacketed vectra fiber rope	Ø.031-inch bare stainless steel rope
available ranges:	*all ranges*	*all ranges up to 500 inches*	*all ranges up to 400 inches*	*550-inch range only*
general use:	indoor	outdoor, debris, high temperature	high voltage or magnetic field	outdoor, debris, high temperature

Cable Exit:

Ⓒ order code:	1	2	3	4
	front 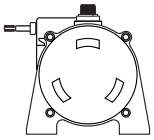	top 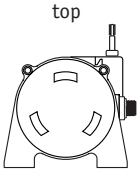	back 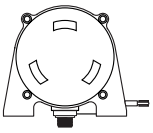	down 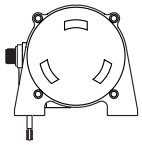

Output Signals:

Ⓓ order code:	1	2	3	4	5*	6*
output signal options:	4...20 mA (4 → 20)	20...4 mA (20 → 4)	0...20 mA (0 → 20)	20...0 mA (20 → 0)	4...20 mA (4 → 20)	20...4 mA (20 → 4)
sensitivity:	16 mA/full stroke ±0.25%		20 mA/full stroke ±0.25%		16 mA/full stroke ±0.25%	
wiring configuration:	2 – wire		3 – wire		2 – wire	
input voltage:	8 – 34 vdc		14 – 29 vdc		14 – 32 vdc	
hazardous area certification:	not certified				CSA	

Output Signal Example:

ordercode = **1** = 4...20 mA

4 mA =

20 mA = 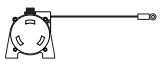

Hazardous Area Certification:

CSA Standard 22.2
Class 1
Groups A, B, C and D

***IMPORTANT:** intrinsically safe when powered from a CSA certified zener barrier rated 28 VDC max, 110 mA max per installation drawing#677984*

Ordering Information (cont.):

Electrical Connection:

order code:	1	2	3	4
	6-pin plastic connector w/mating plug	10-ft. [3 M] waterproof cable	6-pin metal connector w/mating plug	25-ft. [7.5 M] instrumentation cable
	IP 67, NEMA 4X,6**	**IP 67, NEMA 4X**, 6**	**IP 65, NEMA 4**	**IP 67, NEMA 6**
	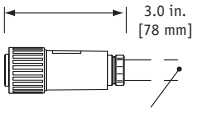	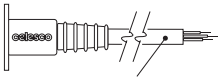	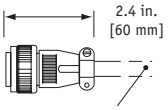	
	1/2 - 5/16" [14 - 8 mm] cable dia. 16 AWG max conductor size connector: MS3102E-14S-6P mating plug: MS3106E-14S-6S	10 ft. x 0.4-in. dia. [3 M x 10 mm dia.] 18 AWG, type SJTOW	3/8-in. [9 mm] max cable dia. 16 AWG max conductor size connector: MS3102E-14S-6P mating plug: MS3106E-14S-6S	25 ft. x 0.2-in. dia. [7,5 M x 5 mm dia.] 24 AWG, shielded

order code:	5	6	7
	100-ft. [30 M] waterproof cable	10-ft. [3 M] **pressure tested*** waterproof cable	100-ft. [30 M] **pressure tested*** waterproof cable
	IP 67, NEMA 4X,6**	**IP 68, NEMA 4X**, 6P**	**IP 68, NEMA 4X**, 6P**
	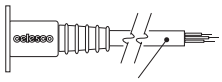	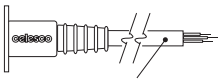	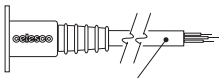
	100 ft. x 0.4-in. dia. [30 M x 10 mm dia.] 18 AWG, type SJTOW	10 ft. x 0.4-in. dia. [3 M x 10 mm dia.] 18 AWG, type SJTOW	100 ft. x 0.4-in. dia. [30 M x 10 mm dia.] 18 AWG, type SJTOW

6-pin Mating Plug

pin	2-wire	3-wire
A	8...34 vdc***	14...29 vdc
B	4...20 mA out	common
C	–	0...20 mA out
D	case ground	–

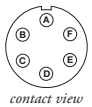

contact view

Waterproof Cable

color code	2-wire	3-wire
WHITE	8...34 vdc***	14...29 vdc
BLACK	4...20 mA out	common
GREEN	case ground	0...20 mA out

Instrumentation Cable

color code	2-wire	3-wire
RED	8...34 vdc***	14...29 vdc
BLACK	4...20 mA out	common
WHITE	n/a	n/a
GREEN	case ground	0...20 mA out

Notes:
- * – *Test pressure: 100 feet [30 meters] H_2O (40 PSID); Test Medium: Air; Duration: 2 hours.*
- ** – *NEMA 4X applies to stainless steel enclosure only.*
- *** – *14-32 VDC for hazardous area option.*

Output Signal Selection (not available with intrinsically safe option):

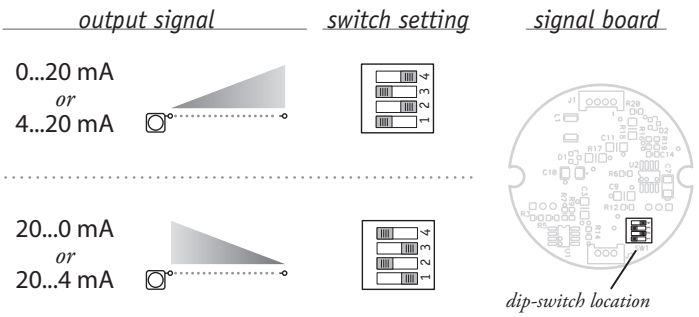

The output signal direction can be reversed at any time by simply changing the dip-switch settings found on the internal signal board. After the settings have been changed, adjustment of the Zero and Span trimpots will be required to precisely match signal values to the beginning and end points of the stroke.

To gain access to the signal board, remove four Allen-Head Screws and remove end cover bracket.

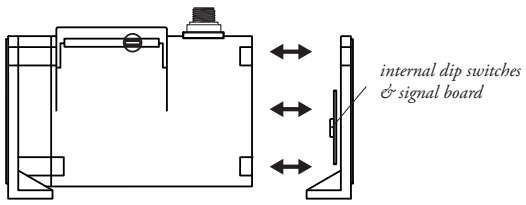

Caution! Do Not Remove Spring-Side End Cover
Removing spring-side end cover could cause spring to become unseated and permanently damaged.

Fig. 2 – Outline Drawing (36 oz. cable tension only)

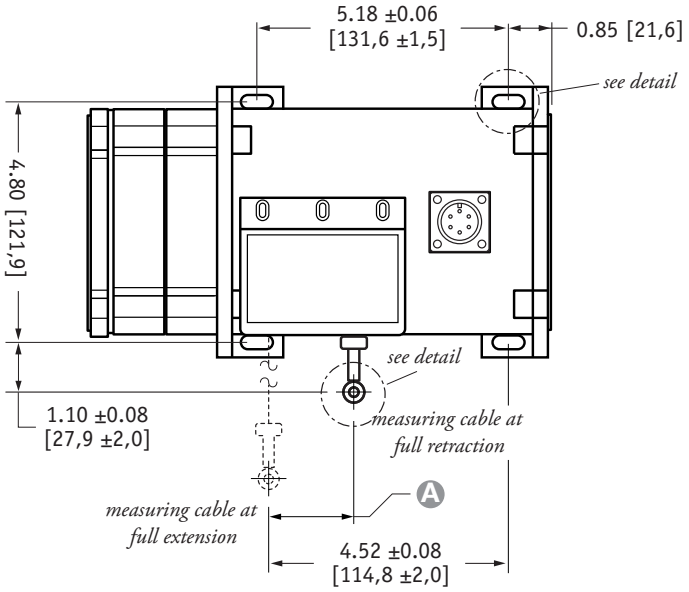

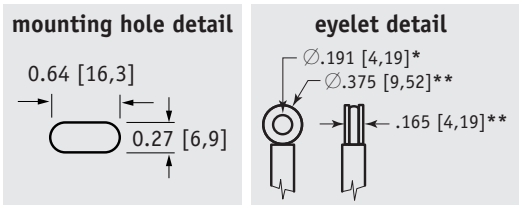

A DIMENSION (INCHES)

	MEASURING CABLE			
RANGE	**∅.031 in.**	**∅.034 in.**	**∅.047 in.**	**∅.062 in.**
75	n/a	0.22	0.29	0.37
100	n/a	0.29	0.39	0.49
150	n/a	0.44	0.59	0.73
200	n/a	0.58	0.79	0.98
250	n/a	0.73	0.98	1.22
300	n/a	0.88	1.18	1.47
350	n/a	1.02	1.38	1.71
400	n/a	1.17	1.57	1.96
450	n/a	1.31	1.77	n/a
500	n/a	1.46	1.97	n/a
550	1.61	1.61	n/a	n/a

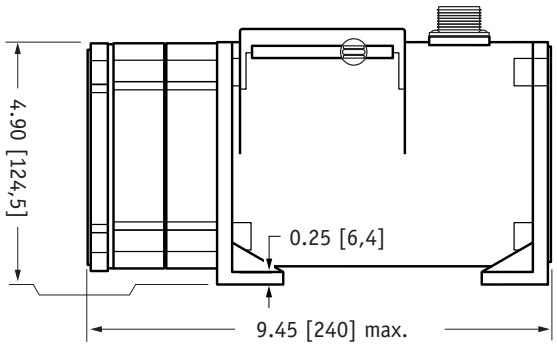

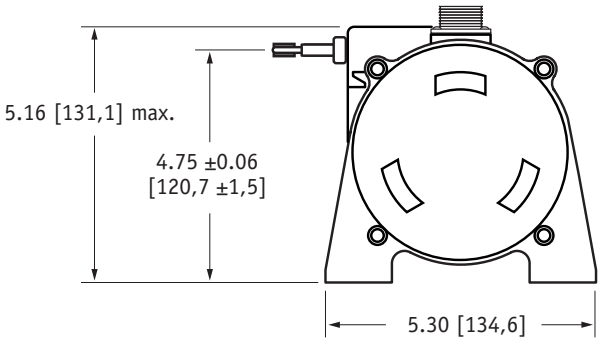

DIMENSIONS ARE IN INCHES [MM]
tolerances are 0.03 IN. [0.5 MM] unless otherwise noted.

* tolerance = +.005 –.001 [+.13 –.03]
** tolerance = +.005 –.005 [+.13 –.13]

VLS Option - Free Release Protection

Our Velocity Limiting System (VLS) is an option for PT9000 Series cable extension transducers that limits cable retraction to a safe 40 to 55 inches per second for the single spring option and 40 to 80 inches per second for the higher tension dual spring option.

The VLS option prevents the measuring cable from ever reaching a damaging velocity during an accidental free release. This option is ideal for mobile applications that require frequent cable disconnection and reconnection. It prevents expensive unscheduled downtime due to accidental cable mishandling or attachment failure.

How To Configure Model Number for VLS Option:

1. using guide below, select PT9420 model **PT9420-0100-111-1110**
2. remove "PT" from the model number ~~PT~~ **9420-0100-111-1110**
3. add "VLS" **VLS + 9420-0100-111-1110**
4. completed model number! **VLS9420-0100-111-1110**

VLS9420- ___ R - ___ A ___ B ___ C - 1 D ___ E ___ F 0 G

R	A	B	C	D	E	F
0075 thru 0550	1	1	1		1	1
	2	2	2		2	2
	3	3	3		3	3
	4	4	4		4	4
					5	5
					6	6
						7

= available options.

NORTH AMERICA
Measurement Specialties, Inc.
a TE Connectivity Company

20630 Plummer Street
Chatsworth, CA 91311
Tel +1-800-423-5483
Tel +1-818-701-2772
Fax +1-800-701-2799

customercare.chtw@te.com

te.com/sensorsolutions

Measurement Specialties Inc. a TE Connectivity company

Measurement Specialties, TE Connectivity, TE Connectivity (logo) and Every Connection Counts are trademarks. All other logos, products and/or company names referred to herein might be trademarks of their respective owners.

The information given herein, including drawings, illustrations and schematics which are intended for illustration purposes only, is believed to be reliable. However, TE Connectivity makes no warranties as to its accuracy or completeness and disclaims any liability in connection with its use. TE Connectivity's obligations shall only be as set forth in TE Connectivity's Standard Terms and Conditions of Sale for this product and in no case will TE Connectivity be liable for any incidental, indirect or consequential damages arising out of the sale, resale, use or misuse of the product. Users of TE Connectivity products should make their own evaluation to determine the suitability of each such product for the specific application.

© 2016 TE Connectivity Ltd. family of companies All Rights Reserved.